Digital Position Indicators

Plastic, for Configurable Linear Actuators, Electronic, LCD-Display

JW WINCO
A Ganter Company

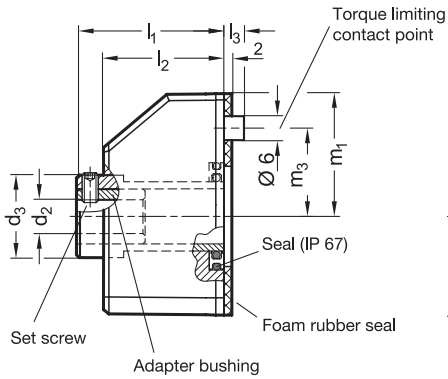

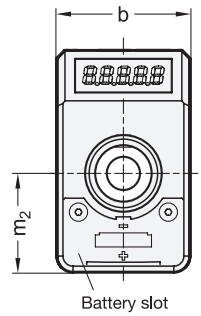

Metric

elesa
Original design DD52R-E / DD51-E

SS Stainless Steel

2 Identification no.

1 Protection class IP 65
2 Protection class IP 67

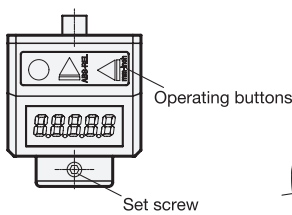

Assembly examples

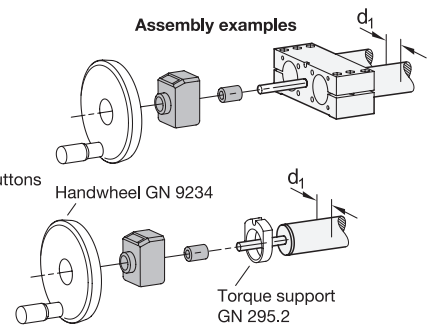

Metric table

1

Dimensions in: millimeters / inches

d_1 Ø Linear actuator	b	d_2 H7	d_3	l_1	l_2	l_3	m_1	m_2	m_3	Set screw	LCD display Number of positions	Max. rpm
25 0.98	33.5 1.32	8 0.31	19.5 0.77	34 1.34	28.5 1.12	5.5 0.22	30.5 1.20	25 0.98	22 0.87	M 4	5	1000
30 1.18	33.5 1.32	8 0.31	19.5 0.77	34 1.34	28.5 1.12	5.5 0.22	30.5 1.20	25 0.98	22 0.87	M 4	5	1000
40 1.57	48 1.89	12 0.47	28.5 1.12	41 1.61	34 1.34	6 0.24	40 1.57	32.5 1.28	30 1.18	M 5	6	1000
50 1.97	48 1.89	12 0.47	28.5 1.12	41 1.61	34 1.34	6 0.24	40 1.57	32.5 1.28	30 1.18	M 5	6	1000
60 2.36	48 1.89	14 0.55	28.5 1.12	41 1.61	34 1.34	6 0.24	40 1.57	32.5 1.28	30 1.18	M 5	6	1000

Specification

3

Housing
Plastic, polyamide (PA)
- Orange, RAL 2004, shiny finish — OR
- Gray, RAL 7035, shiny finish — GR
- Operating temperature 32 °F to 122 °F (0 °C to +50 °C)
- Oil and solvent resistant

LCD display
5 digits / 6 digits and special characters

Hollow shaft / Adapter bushing
Stainless steel AISI 304

O-ring for identification no. 2
Acrylonitrile butadiene rubber (NBR)

RoHS

Digital position indicators EN 9034 are designed for attachment to configurable linear units. They are mounted to the spindle stem of the linear actuator using an adapter bushing and a set screw. The position indicators must be adjusted for the thread pitch and direction of the linear actuators. Power is supplied by a long-life battery.
The housing is welded by ultrasound, making it particularly sturdy, tight and compact. The foam rubber seal prevents the transmission of vibrations and acts as a seal.

Technical Information	Page
ISO Fundamental Tolerances	QVX
IP Protection Classes	QVX
Plastic Characteristics	QVX
Stainless Steel Characteristics	QVX

How to order

1 2 3
EN 9034-50-2-GR

1	Diameter d_1
2	Identification no.
3	Color

WARNING: Cancer and Reproductive Harm — www.P65Warnings.ca.gov