Carriage Clamping Unit

Zinc Die-Cast, Brass Clamping Wedge, for Configurable Profile Linear Actuators

JW WINCO® A Ganter Company

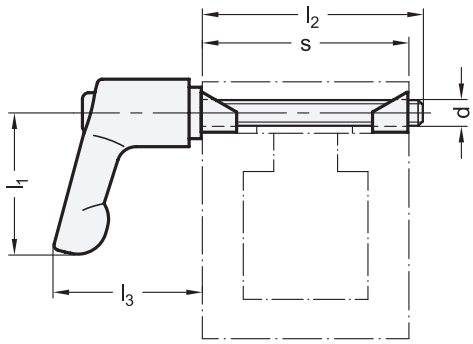

Metric

Application examples

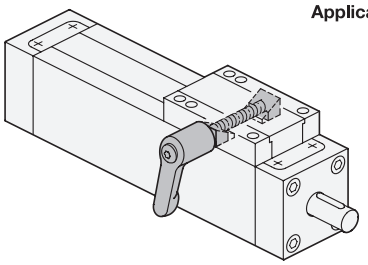

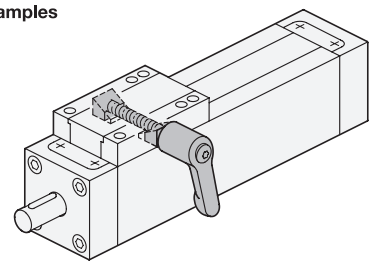

Metric table

Dimensions in: millimeters / inches

1 s ∅ Linear actuators	2 l_1	d	l_2	l_3
30 1.18	22 0.87	M 4	32 1.26	23 0.91
50 1.97	30 1.18	M 5	50 1.97	31 1.22

Specification

3

Adjustable lever

- Handle
  Zinc die-cast
  Powder coated
  Orange, RAL 2004, textured finish ● **OS**
- Insert / Retaining screw
  Stainless steel AISI 303

Clamping wedges

Brass

RoHS

Carriage clamping units GN 891.3 secure carriages of configurable profile linear actuators without tools once they have been positioned. This prevents unintentional movement, e.g. due to vibrations or accidental operation.
The thread of the adjustable lever clamps the wedge mechanism. The resulting friction between the clamping wedges and the carriage guideway secures the carriage position efficiently and without backlash.

see also...	Page
GN 8910 Profile Linear Actuators (with One Carriage)	XYZ
GN 8920 Profile Linear Actuators (with Two Opposing Carriages)	XYZ

Technical Information	Page
Stainless Steel Characteristics	QVX

How to order		
GN 891.3-50-30-OS (1 2 3)	1	Diameter s
	2	Length l_1
	3	Color

⚠ WARNING: Cancer and Reproductive Harm — www.P65Warnings.ca.gov