JW WINCO® A Ganter Company

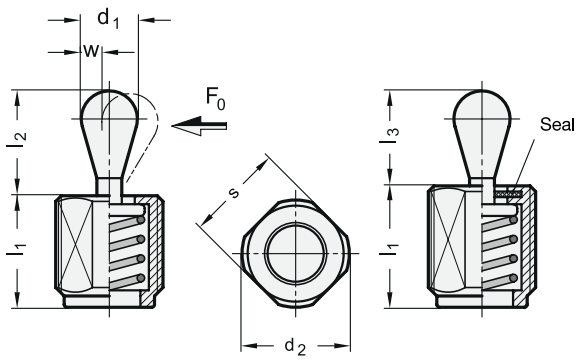

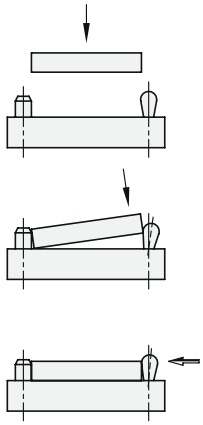

Metric

4 Type

SB Steel thrust pin, with seal
SA* Steel thrust pin, without seal

Metric table

Dimensions in: millimeters - *inches*

1 d_1	2 Side thrust force F_0 ≈ at l_2			3 l_1 –1.5			d_2	a_1	a_2
5 *0.20*	20 N *4.50 lbf*	50 N *11.24 lbf*	100 N *22.48 lbf*	11.5 *0.45*	19 *0.75*	26.5* *1.04*	M 12	2.5 *0.10*	5.7 *0.22*
6 *0.24*	40 N *8.99 lbf*	75 N *16.86 lbf*	150 N *33.72 lbf*	11.5 *0.45*	19 *0.75*	26.5* *1.04*	M 12	3 *0.12*	7.7 *0.30*
10 *0.39*	100 N *22.48 lbf*	200 N *44.96 lbf*	300 N *67.44 lbf*	18 *0.71*	31.5 *1.24*	45* *1.77*	M 18 x 1.5	5 *0.20*	10.7 *0.42*

d_1	k	l_2	l_3	s	w	x_1	x_2	Part number installation tool
5 *0.20*	1.5 x 45°	6.7 *0.26*	6 *0.24*	10 *0.39*	1.6 *0.06*	1.7 *0.07*	1.3 *0.05*	GN 713.1-5.6
6 *0.24*	1.5 x 45°	10.7 *0.42*	10 *0.39*	10 *0.39*	1.8 *0.07*	1.9 *0.07*	1.4 *0.06*	GN 713.1-5.6
10 *0.39*	2 x 45°	16.7 *0.66*	16 *0.63*	16 *0.63*	3.2 *0.13*	3.4 *0.13*	2.7 *0.11*	GN 713.1-10

* Not available from stock, requires a minimum order quantity

Specification

- Body
  Steel, zinc plated, blue passivated finish
- Thrust pin
  Steel
  - Hardened
  - Zinc plated, blue passivated finish
- Thrust spring coding
  - **Gray**: Low thrust force
  - **Black**: Medium thrust force
  - **Silver**: High thrust force
- Seal
  Rubber NBR (Perbunan®)
- *Elastomer Characteristics → page QVX*
- RoHS compliant

Accessory

- Installation tool GN 713.1
  (Part number, see table)

On request

- Type SA: Steel thrust pin, without seal
- Sizes l_1 = 26.5 and 45 mm

Information

GN 713 spring loaded side thrust pins are versatile and practical elements for holding, positioning and clamping of workpieces.

They eliminate costly alternatives, are space saving and easy to install. The protruding height of the thrust pin can be adjusted with the threaded body.

Version with seal used in applications involving a fluid or liquid.

For easy insertion a suitable GN 713.1 installation tool is available (see table).

see also...
• *Press-Fit Side Thrust Pins GN 715 → page QVX*

How to order

1 2 3 4
GN 713-6-75-11.5-SB

1	Diameter d_1
2	Side thrust force F_0
3	Thread engagement l_1
4	Type