Knurled Nuts / Knurled Screws

Plastic, Threaded Bushing Brass / Threaded Stud Steel, with Loss Protection

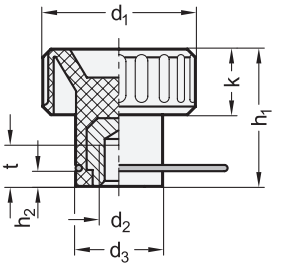

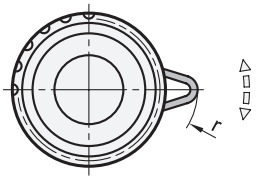

Retaining ring rotating, not removable

Metric



elesa

Original design BTL-RC / BTL-LP

4 Type

R With retaining ring
P With plastic ball chain

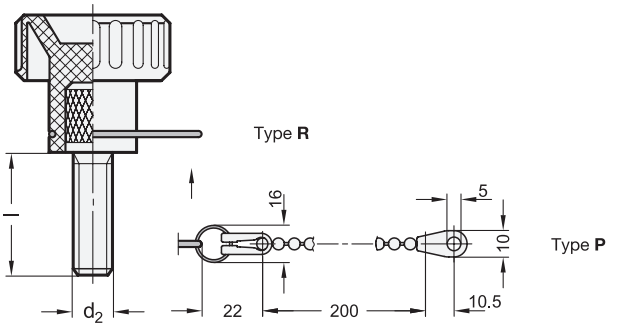

Metric table

Dimensions in: millimeters / inches

1 d_1	2 d_2	3 Length l	d_3	h_1	h_2	k	r	t min.
20 0.79	M 5	-	11 0.43	21 0.83	2.5 0.10	12 0.47	20 0.79	10 0.39
20 0.79	M 6	16 0.63	11 0.43	21 0.83	2.5 0.10	12 0.47	20 0.79	12 0.47
25 0.98	M 6	-	16 0.63	26 1.02	3.5 0.14	15 0.59	21.5 0.85	12 0.47
25 0.98	M 8	20 0.79	16 0.63	26 1.02	3.5 0.14	15 0.59	21.5 0.85	13 0.51
32 1.26	M 8	25 0.98	17 0.67	26 1.02	3.5 0.14	17 0.67	21.5 0.85	15 0.59

Specification

Knob
Plastic, Polyamide (PA)
• Glass fiber reinforced
• Black, matte finish

Threaded bushing
Brass — **M**

Threaded stud
Steel — **S**
Zinc plated, blue passivated finish

Retaining ring / Ball chain
Plastic, polyacetal (POM)
Black

Key ring on type P
Stainless steel AISI 301
Chemically blackened finish

Operating temperature
32 °F to +140 °F (0 °C to +60 °C)

RoHS

Technical Information

Plastic Characteristics	QVX
Stainless Steel Characteristics	QVX

Knurled nuts and knurled screws EN 590.13 are used for quick, tool-free mounting or adjusting of fixtures and devices.
The affixed retaining ring allows knurled nuts and knurled screws EN 590.13 to be secured with a ball chain or retaining cable to prevent loss. Type P is delivered with an attached retaining ring and a ball chain.

Accessory	Page
GN 111.3 Key Rings (Stainless Steel)	QVX
GN 111 Ball Chains (Brass)	QVX
GN 111.5 Ball Chains (Stainless Steel)	QVX
GN 111.2 Retaining Cables (Stainless Steel)	QVX
GN 111.8 Retaining Cables	QVX

How to order (Threaded Bushing)

1 2 4 5
EN 590.13-20-M5-M-R

1	Diameter d_1
2	Thread d_2
4	Material
5	Type

How to order (Threaded Stud)

1 2 3 4 5
EN 590.13-25-M8-20-S-P

1	Diameter d_1
2	Thread d_2
3	Length l
4	Material
5	Type

⚠ WARNING: Cancer and Reproductive Harm — www.P65Warnings.ca.gov