Multiple-joint hinges are a new type of hinge for the construction sector. Mounted inside the housing to save space and protect against vandalism, they allow opening angles of up to 180° on flaps, hatches, and doors. This ensures optimum accessibility to the inside of the housing. In general, the outside of the housing remains free of attachments that do not match the design or must be avoided entirely due to special requirements, such as ease of cleaning.

Multiple-joint hinges replace existing conventional hinge solutions while opening up entirely new motion sequences since they can do more than pivot flaps and doors. The zero-play, self-lubricated multiple-joint mechanism was designed with simulation software and allows a flap to be lifted first on opening and only then pivoted by 180°.

Jointed hinges or cup hinges have been used in the furniture sector for quite some time. These allow similar motion sequences, but the challenges to mount them in technical environments often make them difficult to use. In addition, they are usually only designed for lower load capacities.

The assembly angle brackets or mounting flanges of the multiple-joint hinges, which are mounted on the housing or door, feature slotted holes. Together with the spacer plates available as accessories, the hinges can be adjusted in three planes. This allows them to be used universally in any design. Spacer plates with tapped holes or mounting plates with threaded studs are also available for quick and easy mounting.

Since the development process was focused on creating a design with the most uniform possible gradations of achievable door geometry and load capacity, the hinges are ideal for applications in logistics and vehicle manufacturing in addition to a wide range of industrial applications. The use of high-quality materials and the attractive design open up an even greater range of applications. This means that these hinges are also suitable for use in building services engineering as well as in furniture making and display cases.

To support more complex applications with specific motion sequences, special versions are available that go beyond the typical applications on flaps, hatches and doors. Examples include 4x, 7x or 10x joint mechanisms for corresponding lifting, scissor or extension systems.

Stainless steel multiple-joint hinge	Aluminum multiple-joint hinge
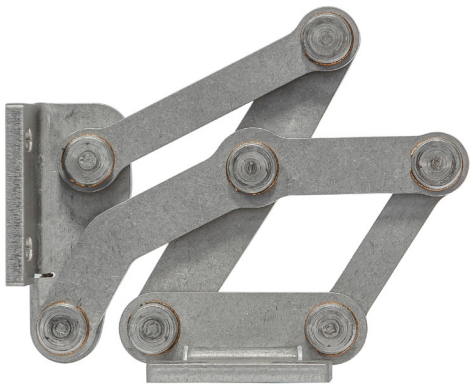	

Series		Opening angle	Load capacity per pair	Max. door / housing thickness in millimeters (s / b) for design version			Material
				Inset 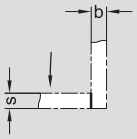	Surface-mounted 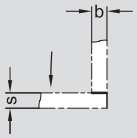	Mitered 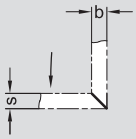	
GN 7231		90°	F_A = 39 lbf (175 N) F_R = 169 lbf (750 N)	$s_{max.}$ = 60 $b_{max.}$ = ∞	$s_{max.}$ = ∞ $b_{max.}$ = 60	$s_{max.}$ = 50 $b_{max.}$ = 50	Stainless steel
GN 7241		90°	F_A = 146 lbf (650 N) F_R = 169 lbf (750 N)	$s_{max.}$ = 30 $b_{max.}$ = ∞	$s_{max.}$ = ∞ $b_{max.}$ = 30	$s_{max.}$ = 30 $b_{max.}$ = 30	Aluminum
GN 7233		120°	F_A = 39 lbf (175 N) F_R = 169 lbf (750 N)	$s_{max.}$ = 50 $b_{max.}$ = ∞	$s_{max.}$ = ∞ $b_{max.}$ = 50	$s_{max.}$ = 40 $b_{max.}$ = 40	Stainless steel
GN 7243	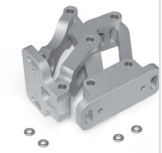	120°	F_A = 146 lbf (650 N) F_R = 169 lbf (750 N)	$s_{max.}$ = 24 $b_{max.}$ = ∞	$s_{max.}$ = ∞ $b_{max.}$ = 24	$s_{max.}$ = 20 $b_{max.}$ = 20	Aluminum
GN 7237		180°	F_A = 39 lbf (175 N) F_R = 169 lbf (750 N)	$s_{max.}$ = 25 $b_{max.}$ = ∞	$s_{max.}$ = ∞ $b_{max.}$ = 25	$s_{max.}$ = 21 $b_{max.}$ = 21	Stainless steel
GN 7247		180°	F_A = 146 lbf (650 N) F_R = 169 lbf (750 N)	$s_{max.}$ = 15 $b_{max.}$ = ∞	$s_{max.}$ = ∞ $b_{max.}$ = 15	$s_{max.}$ = 11 $b_{max.}$ = 11	Aluminum

Design

Stainless steel multiple-joint hinges	Aluminum multiple-joint hinges
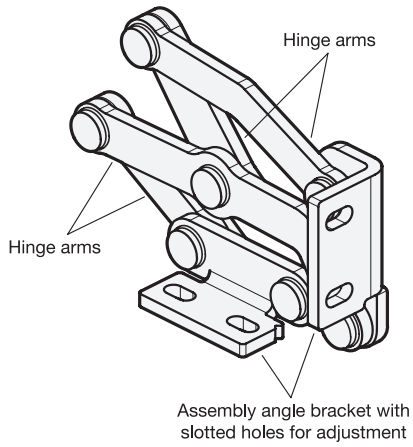	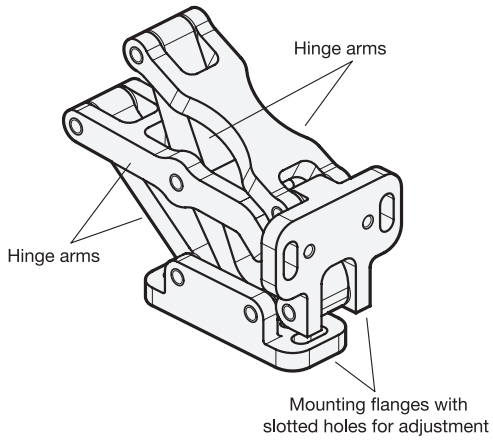
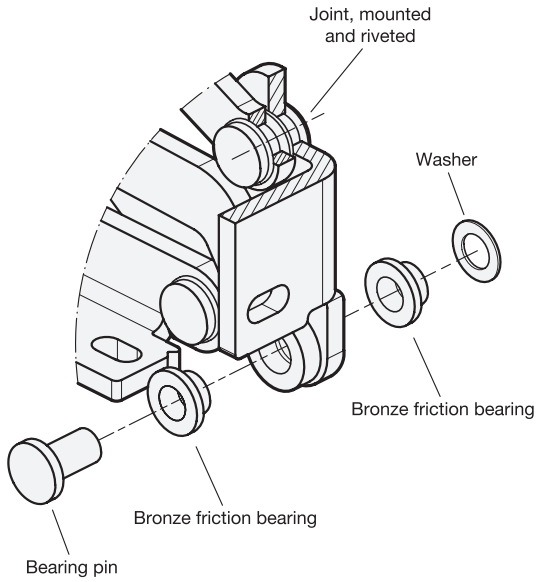	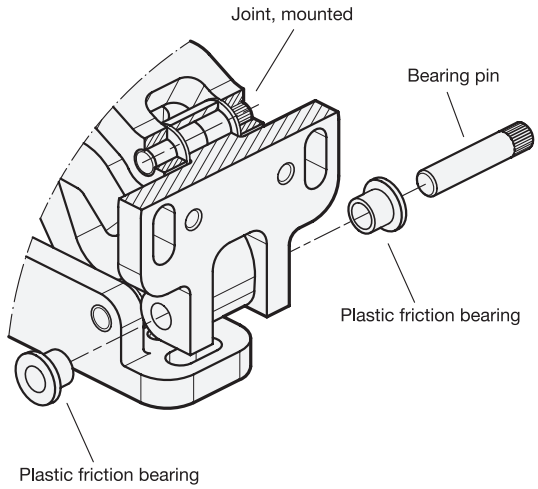

Applications

For stainless steel multiple-joint hinges, the bearing points of the joints are arranged in two levels that are very close to each other. This makes them particularly suitable for applications with flaps and hatches.

For aluminum multiple-joint hinges, the bearing point levels of the joints are spaced more widely, making them suitable for use with doors, even heavy ones.

Areas of application and requirements

	Industries	Examples of use	Examples of requirements
Manufacturing	Machine and plant engineering	Machine doors, cleaning flaps	**Kinematics** - Large opening angle - Concealed, space-saving, zero-play, self-lubricating, reliable, adjustable - Motion sequence as per specification - Lifting with subsequent pivoting - With additional indexing or spring elements **Design** - Surface finish - Refined appearance - Round, convex, concave housing shapes - Inset, surface-mounted or mitered installation - Vandalism-proof, concealed, gap-free **Safety** - Stability and resilience - Reliability - Compliance with safety requirements - Avoidance of collisions - High load capacity - Long lifespan - Corrosion resistance
	Medical and pharmaceutical industry	Repair and maintenance hatches	
	Chemical and electrical industry	Pivot mechanisms, shelves	
	Logistics and conveyor systems	Safety devices, conveyor hatches, adjustment units and control systems	
Transport	Bus and rail industry	Luggage hatches, storage compartments, rear and skirt hatches	
	Agricultural and construction machinery	Cabin construction, auxiliary units, engine hoods, front hatches, repair and maintenance openings	
	Ship and yacht building	Exterior hatches, floor hatches, door and maintenance systems	
Architecture	Furniture and display case construction	Interior fittings and glass enclosures	
	Building services engineering	Door systems, glass facades, skylights, maintenance and repair shafts, emergency openings, access hatches, stair and floor hatches, fire protection systems	

Application examples