Short Indexing Plungers

Steel / Stainless Steel, Lock-Out

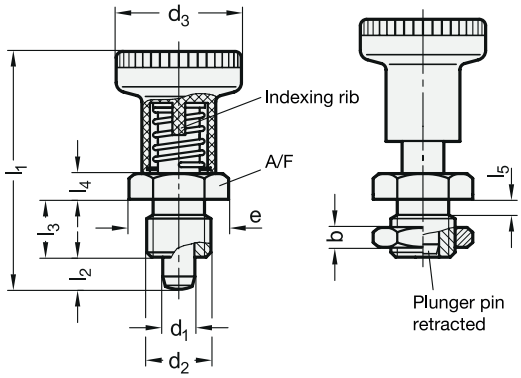

Assembly examples

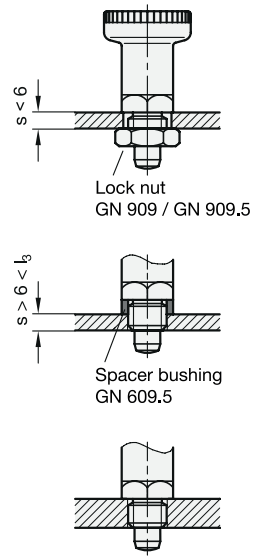

Metric

SS Stainless Steel

2 Type

A Without lock nut
AK With lock nut

Metric table

1

Dimensions in: millimeters / inches

d_1 Pin $^{-0.02}_{-0.05}$ Bore H7	b	d_2	d_3	e ≈	l_1	l_2 ±0.5	l_3 −0.15	l_4	l_5	A/F	Spring load ≈ Steel Initial	Spring load ≈ Steel End	Spring load ≈ Stainless steel Initial	Spring load ≈ Stainless steel End	Axial load
6 0.236	4 0.16	M 12 x 1.5	25 0.98	19.6 0.77	45 1.77	6 0.236	10 0.394	5 0.20	3 0.12	17 0.67	11 N 2.47 lbf	28 N 6.29 lbf	9 N 2.02 lbf	25 N 5.62 lbf	400 N 89.92 lbf
8 0.315	4.5 0.18	M 16 x 1.5	31 1.22	21.9 0.86	54 2.13	8 0.315	12 0.472	6 0.24	3 0.12	19 0.75	15 N 3.37 lbf	29 N 6.52 lbf	13 N 2.92 lbf	26 N 5.85 lbf	500 N 112 lbf

Specification

3

Guide
- Steel, blackened finish — **ST**
- Stainless steel AISI 303 — **NI**

Plunger pin
- Steel for ST
  - Blackened finish
  - Tip hardened
- Stainless steel AISI 303 for NI
  Chemically nickel plated

Knob
Plastic, Polyamide (PA)
- Black, matte finish
- Not removable

Spring
Stainless steel AISI 302

Thin hex nut
- GN 909 Steel, blackened finish for ST
- GN 909.5 Stainless steel AISI 303 for NI

RoHS

Accessory

GN 412.2 | GN 412.4 Locating Bushings	QVX
GN 412.3 | GN 412.5 Locating Bushings	QVX
GN 609.5 Spacer Bushings (to Limit the Thread Length)	QVX
GN 909 | GN 909.5 Thin Hex Nuts	QVX

Short indexing plungers GN 607.1 with rest position are used for such applications where the plunger has to stay in its retracted position. To achieve this, the knob is rotated by 90° degrees after being retracted. A notch keeps the plunger in this position.
Stainless steel indexing plungers GN 607.1 are distinguished for their small dimensions. The thin hex nuts GN 909.5 enlarge the mounting options. The locking tab is an integral part of the knob thus giving reliable operation at all times.

Technical Information

List of Indexing Plunger Types	QVX
Load Rating Information	QVX
ISO Fundamental Tolerances	QVX
Plastic Characteristics	QVX
Stainless Steel Characteristics	QVX

How to order (Steel)		
1 2 3	1	Pin diameter d_1
GN 607.1-6-A-ST	2	Type
	3	Material

How to order (Stainless steel)		
1 2 3	1	Pin diameter d_1
GN 607.1-8-A-NI	2	Type
	3	Material

WARNING: Cancer and Reproductive Harm — www.P65Warnings.ca.gov