Straight Adjustable Levers

Zinc Die-Cast, Threaded Stud Type, with Stainless Steel Components

JW WINCO® A Ganter Company

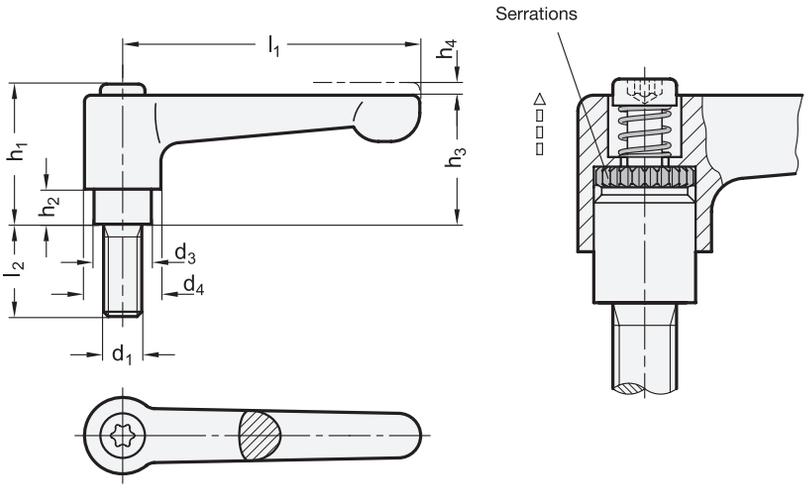

Inch | Metric

Specification

- Lever body
  Zinc die-cast
- Powder coated
  Black, RAL 9005, textured finish ● SW
  Orange, RAL 2004, textured finish ● OS
  Red, RAL 3000, textured finish ● RS
  Silver, RAL 9006, textured finish ● SR
- Threaded stud / retaining screw
  Stainless steel AISI 303
- *Stainless Steel Characteristics → page 2143*
- RoHS compliant

On request

- Special stud lengths and threads

Information

GN 302.1 adjustable levers have a straight lever parallel to the clamping surface. For some applications this presents an advantage due to limits of space or for visual reasons.

These levers have proven to be ideal wherever parts have to be clamped in a confined space or in a particular lever position. The insert is connected to the lever via serrations that can easily be disengaged.

Pulling the lever upwards disengages the serrations, allowing it to be swiveled to the ideal clamping position. When releasing the lever, the serrations automatically re-engage.

see also...
- *Straight Adjustable Levers GN 302 (with Steel Threaded Stud) → page 454*
- *Adjustable Levers GN 300 (with Steel Threaded Stud) → page 408*
- *Adjustable Levers GN 300.1 (with Stainless Steel Threaded Stud) → page 412*

How to order (Inch)		
GN 302.1-63-5/16X18-63-RS (1 2 3 4)	1	Lever length l_1
	2	Thread d_1
	3	Thread length l_2
	4	Color

How to order (Metric)		
GN 302.1-78-M10-25-SW (1 2 3 4)	1	Lever length l_1
	2	Thread d_1
	3	Thread length l_2
	4	Color

Inch table

Dimensions in: inches - *millimeters*

1 l_1	2 d_1	3 l_2								d_3	d_4	h_1	h_2	h_3	h_4 Stroke
0.87 *22*	6 x 32	0.24 *6*	0.31 *8*	0.39 *10*	0.47 *12*	0.63 *16*	-	-	-	0.31 *8*	0.41 *10.5*	0.73 *18.5*	0.08 *2*	0.65 *16.5*	0.12 *3*
0.87 *22*	8 x 32	0.39 *10*	0.47 *12*	0.63 *16*	0.79 *20*	0.98 *25*	-	-	-	0.31 *8*	0.41 *10.5*	0.73 *18.5*	0.08 *2*	0.65 *16.5*	0.12 *3*
0.87 *22*	10 x 32	0.47 *12*	0.63 *16*	0.79 *20*	0.98 *25*	1.26 *32*	-	-	-	0.31 *8*	0.41 *10.5*	0.73 *18.5*	0.08 *2*	0.65 *16.5*	0.12 *3*
1.18 *30*	10 x 32	0.47 *12*	0.63 *16*	0.79 *20*	0.98 *25*	1.26 *32*	-	-	-	0.39 *10*	0.51 *13*	0.96 *24.5*	0.16 *4*	0.87 *22*	0.14 *3.5*
1.18 *30*	10 x 24	0.63 *16*	0.79 *20*	0.98 *25*	1.26 *32*	-	-	-	-	0.39 *10*	0.51 *13*	0.96 *24.5*	0.16 *4*	0.87 *22*	0.14 *3.5*
1.18 *30*	1/4 x 20	0.47 *12*	0.63 *16*	0.79 *20*	0.98 *25*	1.26 *32*	1.57 *40*	1.77 *45*	-	0.39 *10*	0.51 *13*	0.96 *24.5*	0.16 *4*	0.87 *22*	0.14 *3.5*
1.77 *45*	10 x 32	0.47 *12*	0.63 *16*	0.79 *20*	0.98 *25*	1.26 *32*	-	-	-	0.39 *10*	0.51 *13*	0.96 *24.5*	0.16 *4*	0.87 *22*	0.14 *3.5*
1.77 *45*	1/4 x 20	0.47 *12*	0.63 *16*	0.79 *20*	0.98 *25*	1.26 *32*	1.57 *40*	-	-	0.39 *10*	0.51 *13*	0.96 *24.5*	0.16 *4*	0.87 *22*	0.14 *3.5*
2.48 *63*	5/16 x 18	0.63 *16*	0.79 *20*	0.98 *25*	1.26 *32*	1.57 *40*	1.97 *50*	2.48 *63*	-	0.53 *13.5*	0.69 *17.5*	1.22 *31*	0.26 *6.5*	1.12 *28.5*	0.16 *4*
2.48 *63*	3/8 x 16	0.63 *16*	0.79 *20*	0.98 *25*	1.26 *32*	1.57 *40*	1.97 *50*	-	-	0.53 *13.5*	0.69 *17.5*	1.22 *31*	0.26 *6.5*	1.12 *28.5*	0.16 *4*
3.07 *78*	3/8 x 16	0.63 *16*	0.79 *20*	0.98 *25*	1.26 *32*	1.57 *40*	1.77 *45*	1.97 *50*	2.48 *63*	0.63 *16*	0.83 *21*	1.42 *36*	0.31 *8*	1.34 *34*	0.16 *4*

Metric table

Dimensions in: millimeters - *inches*

1 l_1	2 d_1			3 l_2							d_3	d_4	h_1	h_2	h_3	h_4 Stroke
22 *0.87*	M 3	-	-	6 *0.24*	8 *0.31*	10 *0.39*	12 *0.47*	16 *0.63*	-	-	8 *0.31*	10.5 *0.41*	18.5 *0.73*	2 *0.08*	16.5 *0.65*	3 *0.12*
22 *0.87*	M 4	M 5	-	12 *0.47*	16 *0.63*	20 *0.79*	25 *0.98*	32 *1.26*	-	-	8 *0.31*	10.5 *0.41*	18.5 *0.73*	2 *0.08*	16.5 *0.65*	3 *0.12*
30 *1.18*	M 4	-	-	12 *0.47*	16 *0.63*	20 *0.79*	25 *0.98*	32 *1.26*	-	-	10 *0.39*	13 *0.51*	24.5 *0.96*	4 *0.16*	22 *0.87*	3.5 *0.14*
30 *1.18*	M 5	M 6	-	12 *0.47*	16 *0.63*	20 *0.79*	25 *0.98*	32 *1.26*	40 *1.57*	50 *1.97*	10 *0.39*	13 *0.51*	24.5 *0.96*	4 *0.16*	22 *0.87*	3.5 *0.14*
45 *1.77*	M 4	-	-	12 *0.47*	16 *0.63*	20 *0.79*	25 *0.98*	32 *1.26*	-	-	10 *0.39*	13 *0.51*	24.5 *0.96*	4 *0.16*	22 *0.87*	3.5 *0.14*
45 *1.77*	M 5	M 6	-	12 *0.47*	16 *0.63*	20 *0.79*	25 *0.98*	32 *1.26*	40 *1.57*	50 *1.97*	10 *0.39*	13 *0.51*	24.5 *0.96*	4 *0.16*	22 *0.87*	3.5 *0.14*
63 *2.48*	M 6	M 8	-	16 *0.63*	20 *0.79*	25 *0.98*	32 *1.26*	40 *1.57*	50 *1.97*	63 *2.48*	13.5 *0.53*	17.5 *0.69*	31 *1.22*	6.5 *0.26*	28.5 *1.12*	4 *0.16*
78 *3.07*	M 8	M 10	M 12	20 *0.79*	25 *0.98*	32 *1.26*	40 *1.57*	50 *1.97*	63 *2.48*	80 *3.15*	16 *0.63*	21 *0.83*	36 *1.42*	8 *0.31*	34 *1.34*	4 *0.16*