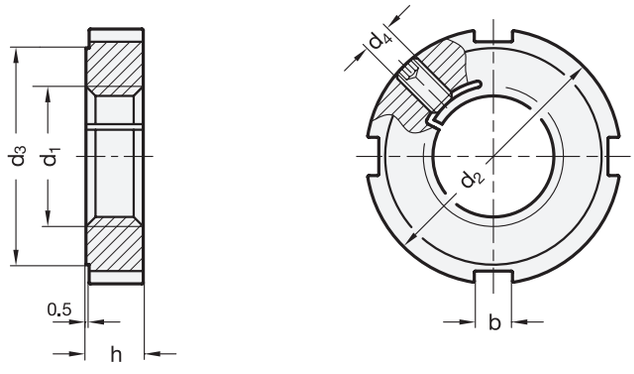

Metric

Metric table

Dimensions in: millimeters - *inches*

d_1	d_2	d_3	d_4	b	h	Part number hook spanner wrench
M 12 x 1.5	28 *1.10*	23 *0.91*	M 4	5 *0.20*	6 *0.24*	DIN 1810-A25-28
M 14 x 1.5	30 *1.18*	25 *0.98*	M 4	5 *0.20*	7 *0.28*	DIN 1810-A30-32
M 16 x 1.5	32 *1.26*	27 *1.06*	M 5	5 *0.20*	7 *0.28*	DIN 1810-A30-32
M 18 x 1.5	34 *1.34*	28 *1.10*	M 5	6 *0.24*	8 *0.31*	DIN 1810-A34-36
M 20 x 1.5	36 *1.42*	30 *1.18*	M 5	6 *0.24*	8 *0.31*	DIN 1810-A34-36
M 22 x 1.5	40 *1.57*	34 *1.34*	M 5	6 *0.24*	9 *0.35*	DIN 1810-A40-42
M 24 x 1.5	42 *1.65*	36 *1.42*	M 5	6 *0.24*	9 *0.35*	DIN 1810-A40-42
M 30 x 1.5	50 *1.97*	43 *1.69*	M 5	7 *0.28*	10 *0.39*	DIN 1810-A45-50
M 35 x 1.5	55 *2.17*	48 *1.89*	M 6	7 *0.28*	11 *0.43*	DIN 1810-A52-55
M 40 x 1.5	62 *2.44*	54 *2.13*	M 8	8 *0.31*	12 *0.47*	DIN 1810-A58-62

Specification

- Nut
  Steel — **ST**
  - Property class 5
  - Blackened finish
- Set screw
  Steel, blackened finish
- *Strength Values of Nuts → page 2127*
- RoHS compliant

Accessory

- Hook spanner wrenches DIN 1810
  (Part number, see table)

Information

GN 1804.2 slotted spanner lock nuts with thread locking can be secured against twisting via the d_4 set screw. The thread flanks of the nut ensure damage-free securing and can be used as often as needed.

The offset smooth surface d_3 is intended as an axial contact surface.

How to order		
GN 1804.2-M20X1.5-ST	1	Thread d_1
	2	Material

WARNING: Cancer and Reproductive Harm — www.P65Warnings.ca.gov